SWEDSTUFF.

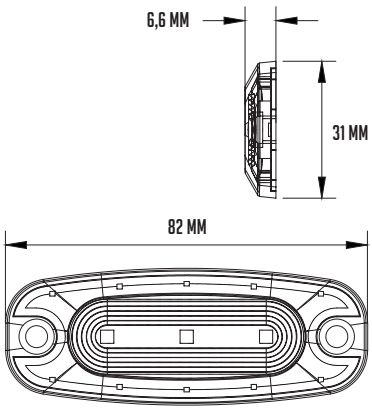

LED LIGHT HEAD
3 LED / WITH 3M TAPE

Voltage	*12-24V DC*	**Cable length**	*400mm*
Watt	*12*	**Length**	*82mm*
Patterns	*26*	**Depth**	*6,6mm*
IP-class	*IP67*	**Height**	*31mm*
Color lens	*Clear*	**E-approved**	*ECE R65*
Color LED	*Amber*	**EMC-certificate**	*ECE R10*

PART NO. 850123HP-A